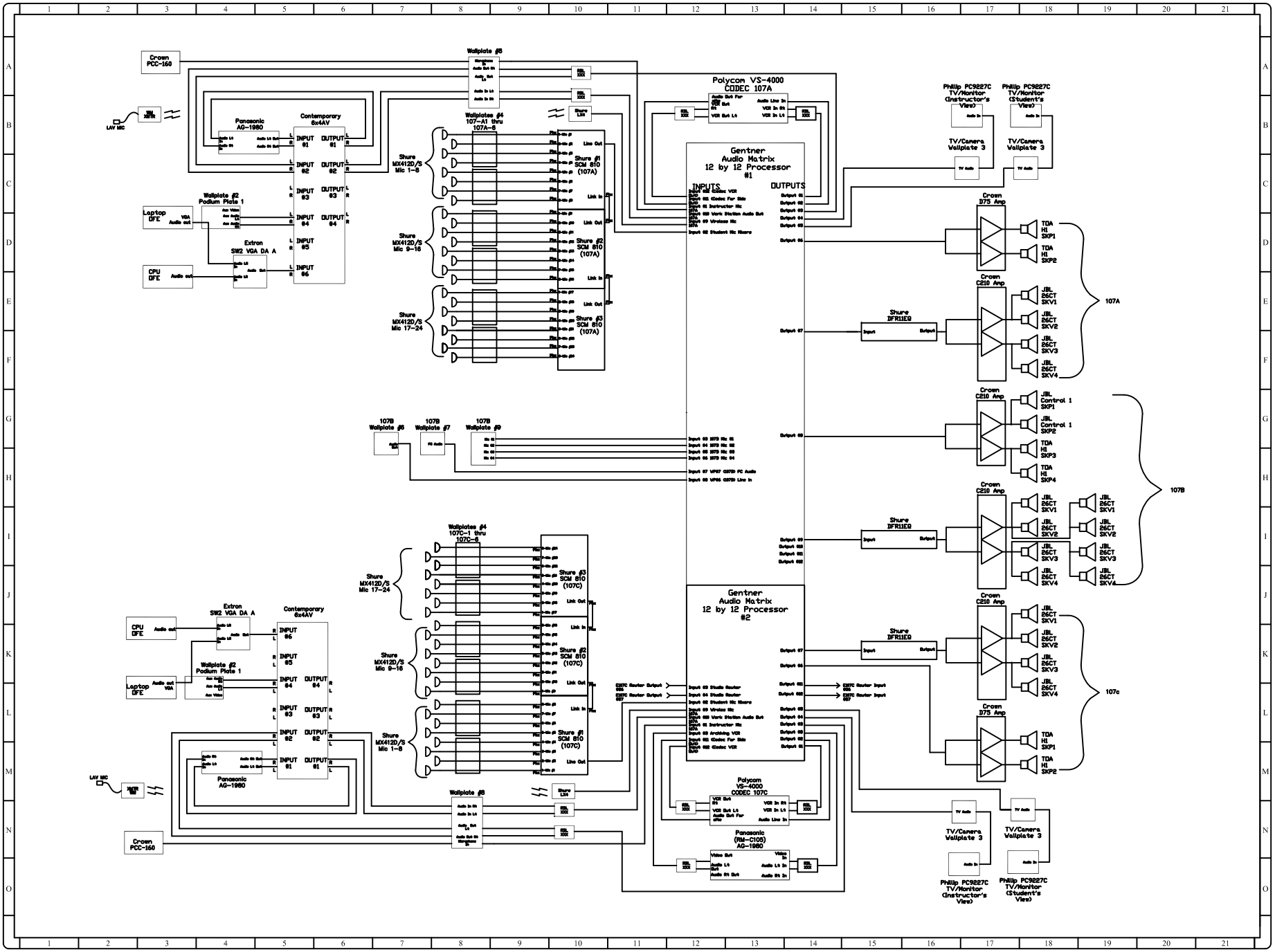

noslar
delivering technology solutions

19424 Park Row, Suite 140
Houston, TX 77084
(T) 281-578-8888
(F) 281-578-7838
http://www.noslar.com

This drawing, concept, specifications and dimensions, regardless of how furnished is the property of Noslar T.I., Inc. This drawing may not be reproduced or copied in any way shape or fashion. Products may not be manufactured and/or drawings may not be used in any works or publications unless owner has given express written consent.

Copyright ©2002 Orlando Cardenas
All Rights Reserved

ENGINEERING SAMPLE

AUDIO LAYOUNT

Drawing Name:	Drawing Name:
Drawing Path:	Drawing Path:
Engineer:	Engineer:
Scale:	Scale:

Issues and Revisions

No.	Date	Description